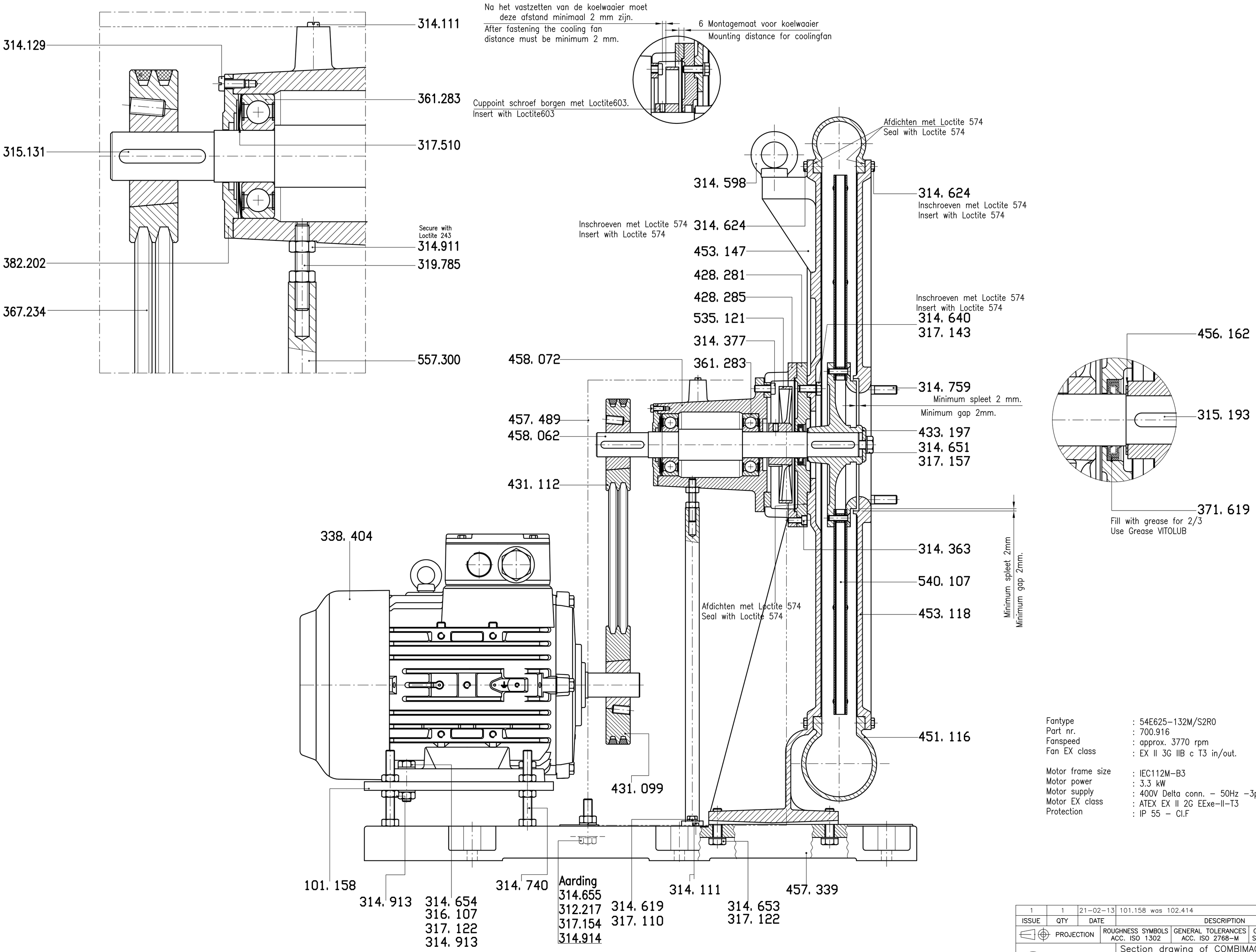

Fantype	: 54E625-132M/S2R0
Part nr.	: 700.916
Fanspeed	: approx. 3770 rpm
Fan EX class	: EX II 3G IIB c T3 in/out.
Motor frame size	: IEC112M-B3
Motor power	: 3.3 kW
Motor supply	: 400V Delta conn. - 50Hz -3ph.
Motor EX class	: ATEX EX II 2G EExe-II-T3
Protection	: IP 55 - Cl.F

ISSUE	QTY	DATE	DESCRIPTION	NAME
1	1	21-02-13	101.158 was 102.414	AB

PROJECTION | ROUGHNESS SYMBOLS ACC. ISO 1302 | GENERAL TOLERANCES ACC. ISO 2768-M | GEOMETRIC TOLERANCE SYMBOLS ACC. ISO 1101 | 003.953

COMBIMAC BV
EMMEN-HOLLAND

Section drawing of COMBIMAC fan.
Type 54E625-132M/S2R0

SCALE 1:2 | DIMS IN mm | DRAWN 060512 HvK | CHECKED

A.700.916

This document is confidential. The copyright is vested in Combimac B.V., Emmen, The Netherlands. All rights reserved. Neither the whole nor any part of this document may be reproduced, stored in a retrieval system or transmitted in any form or by any means (electronic, mechanical, reprographic, recording or otherwise) without the prior written consent of the copyright owner.