Power and Control Isolation
Key Exchange
Door Locks and Actuators » Spring Loaded Handle Operated Actuator **DM-A**

Spring Loaded Handle Operated Actuator

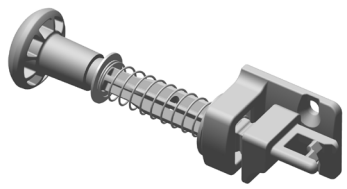

- For use with all DM type locks
- Suitable for use where secondary action is required
- Overcomes misalignment
- Vertical adjustment: +/- 6mm
- Rotational adjustment of bracket, to suit all four DM handing options
- Detent hold actuator in place when the door is open

mGard range

mGard is the ultimate range of robust mechanical trapped key products. Trapped key technology offers purely mechanical access locks (removing the need for expensive wiring). mGard offers an extensive variety of modular interlocking solutions. Suitable for use in applications up to SIL3 (EN/IEC 62061),Category 4 and PLe (EN/ISO 13849-1), mGard is ideal for use in harsh environments and is tested to 1,000,000 operations.

Article Codes

Actuator Type	Part Nº
Separate	DM-A
In combination with DM	-A

Technical Specification

Retention Force (in combination with DM or DMSK top-entry)	2500N
Retention Force (in combination with DM or DMSK side-entry)	2500N

Dimensional Drawing

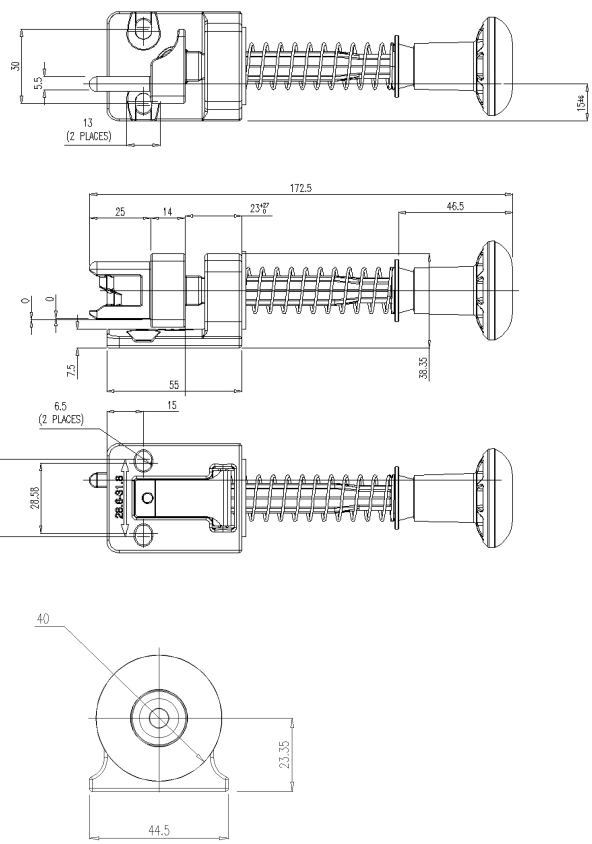
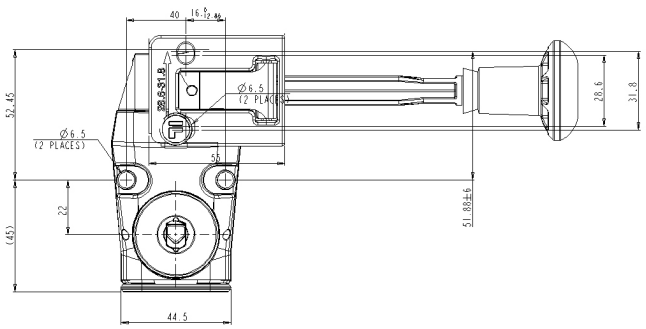
Dimensional Drawing *(in combination with DM door interlock)*